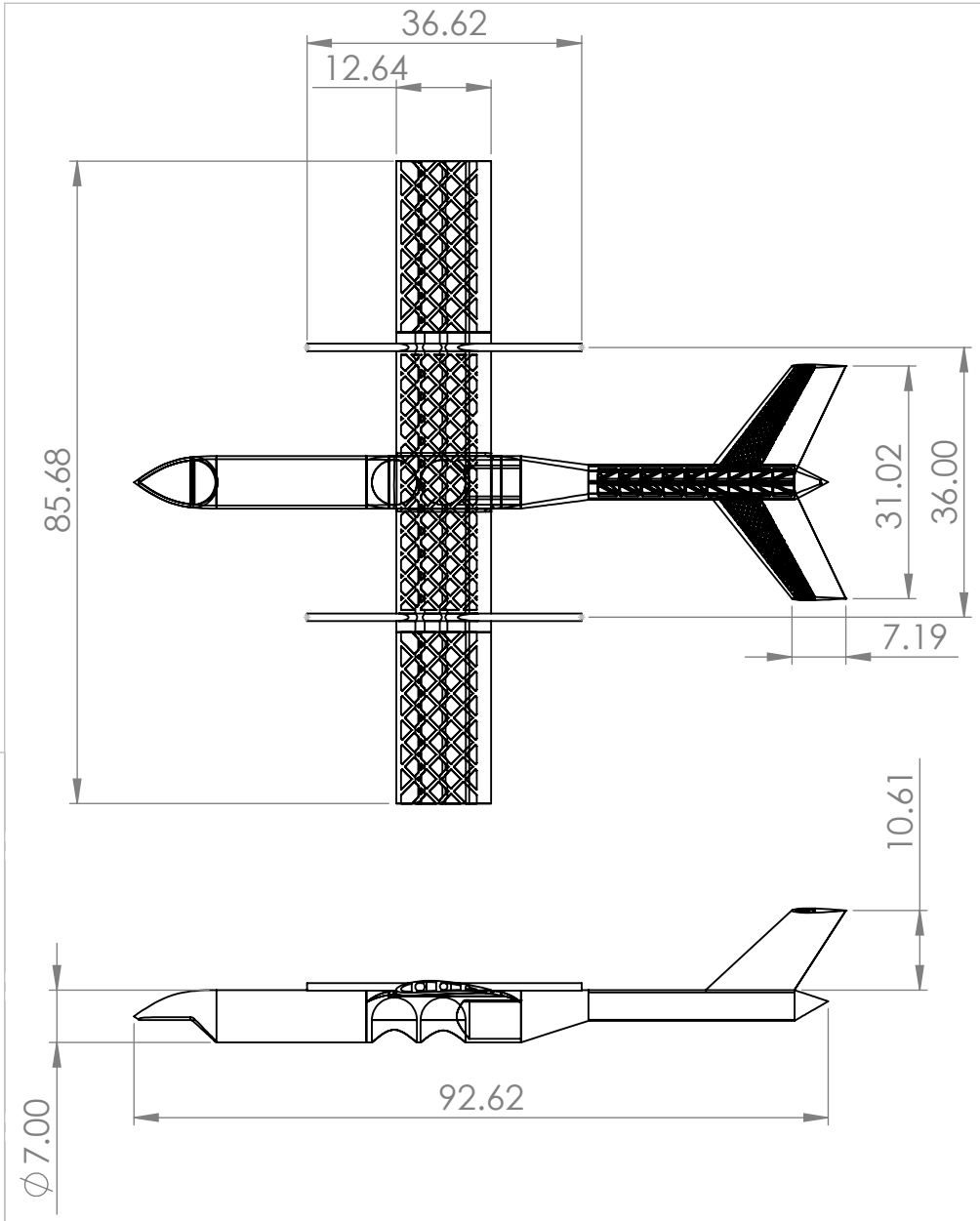

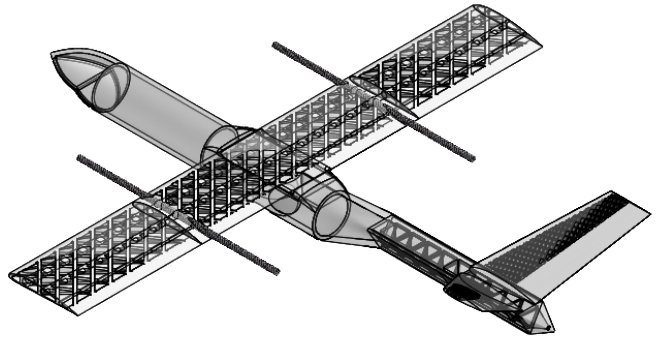

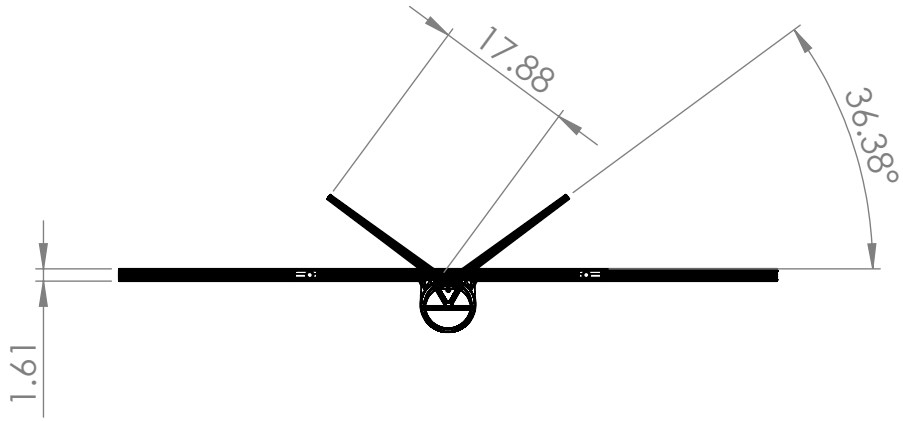

JAGER-V3
DWG NO: SD-001
REV: A
SCALE: 1:25
UNITS: INCHES
DRAWN BY: J. SIGAFOOS
DATE: 27 FEB 2026
SHEET 1 OF 1

UNIVERSITY OF CALIFORNIA, SAN DIEGO
MAE 155A – SENIOR DESIGN
TEAM 1

SOLIDWORKS Educational Product. For Instructional Use Only.